RETURN FROM TUTU

ESD RETURN FROM SHEET 02

RELIEF VALVE RETURN FROM SHEET 02

LP1 SUPPLY PRESSURE CONT. ON SHEET 02

LP2 SUPPLY PRESSURE CONT. ON SHEET 02

HP1 SUPPLY PRESSURE CONT. ON SHEET 02

HP2 SUPPLY PRESSURE CONT. ON SHEET 02

DRAIN RETURN RESERVOIR

DRAIN SUPPLY RESERVOIR

FLUID FILLING PUMP

AIR SUPPLY

RETURN 1800 LTR

SUPPLY 1000 LTR

CP 0.07 BAR

CP 0.05 BAR

△P 2,5 BAR

△P 6,9 BAR

SP 380 BAR

SP 760 BAR

345/207 BAR

690/517 BAR

BP 450 BAR

BP 1100 BAR

50L

60L

22L

3µm

25mmOD x 2,0mmWT

12mmOD x 2,0mmWT

16mmOD x 2,0mmWT

6mm O.D. x 1mm WT

12mm O.D. x 2mm WT

3/8" O.D. x 0.203" ID

RECEIVER: client

AS BUILT

19 NOV. 2001

SIGN.

KONGSBERG OFFSHORE A.S

OTTER PROJECT

NAME	
DBE	
DBU	✓
IW	✓
CC	
BB	
AN	
MO	
MC	
KA	
GL-PE/PRO	
FC-WCM/DEX	
MH-WCM/DEX	
AMcI-WCM/DEX	
PE/PRO	
TS/MPL	
SAFETY	
DGEP	
HM-CD/PLN	
FMC	
CSO	
SHELL	✓
CENTRILIFT	

NOTES:

ALL NOTES REFER TO SHT. 02

Rev.	Date	Issue Description	Prep.	Chkd	Appr.
AB2	11.10.01	AS-BUILT	KH	OB	PO
AB1	18.09.01	AS-BUILT	SMK	JRJ	OB
ABO	22.08.01	AS-BUILT	K.H	JRJ	OB
02	10.08.01	REISSUED FOR CONSTRUCTION	SMS	JRJ	OB
01	03.05.01	ISSUED FOR CONSTRUCTION	SMS	RH	PO
00	02.03.01	ISSUED FOR APPROVAL	SMK	PO	RH

Customer: FMC KONGSBERG SUBSEA

Project: OTTER HPU

First Angle Projection — All dim. in mm

Scale: –

Semco Technology a.s
Fabrikkveien 25. 4065 Stavanger
Tel. 51811200 Fax. 51811201

Drawing Title: HYDRAULIC SCHEMATIC DIAGRAM HPU

Drawing Size	Dwg No.	Sheet	Rev.
A1	7512-D02-001	01 of 02	AB2

REV.	DATE	DESCRIPTION	DRN	DRG CHK	ENG CHK	ENG APP	PROJ APP	TFEEUK APP
02	23.10.01	AS BUILT	SEM	TOHA	TOHA	JTT	JTT	

TOTAL FINA ELF — OTTER FIELD DEVELOPMENT

DRG NO. OTT-U10-PT-80-1072 — Contractor — SHT. 01 — REV. L

REL./CHANGE NO.	PREPARED	LAST SAVED (DATE/TIME)	REV.
500000008139	Berit Kopseng	23.10.2001 15:13	B

FMC EnergySystems — FMC Kongsberg Subsea

DRAWING NO. XV-0001000122

TITLE: HPU Hydraulic schematic - Otter — SHEET 1 OF 2

ELECTRONIC ORIGINAL
User is responsible for verification of correct revision status on document copy.

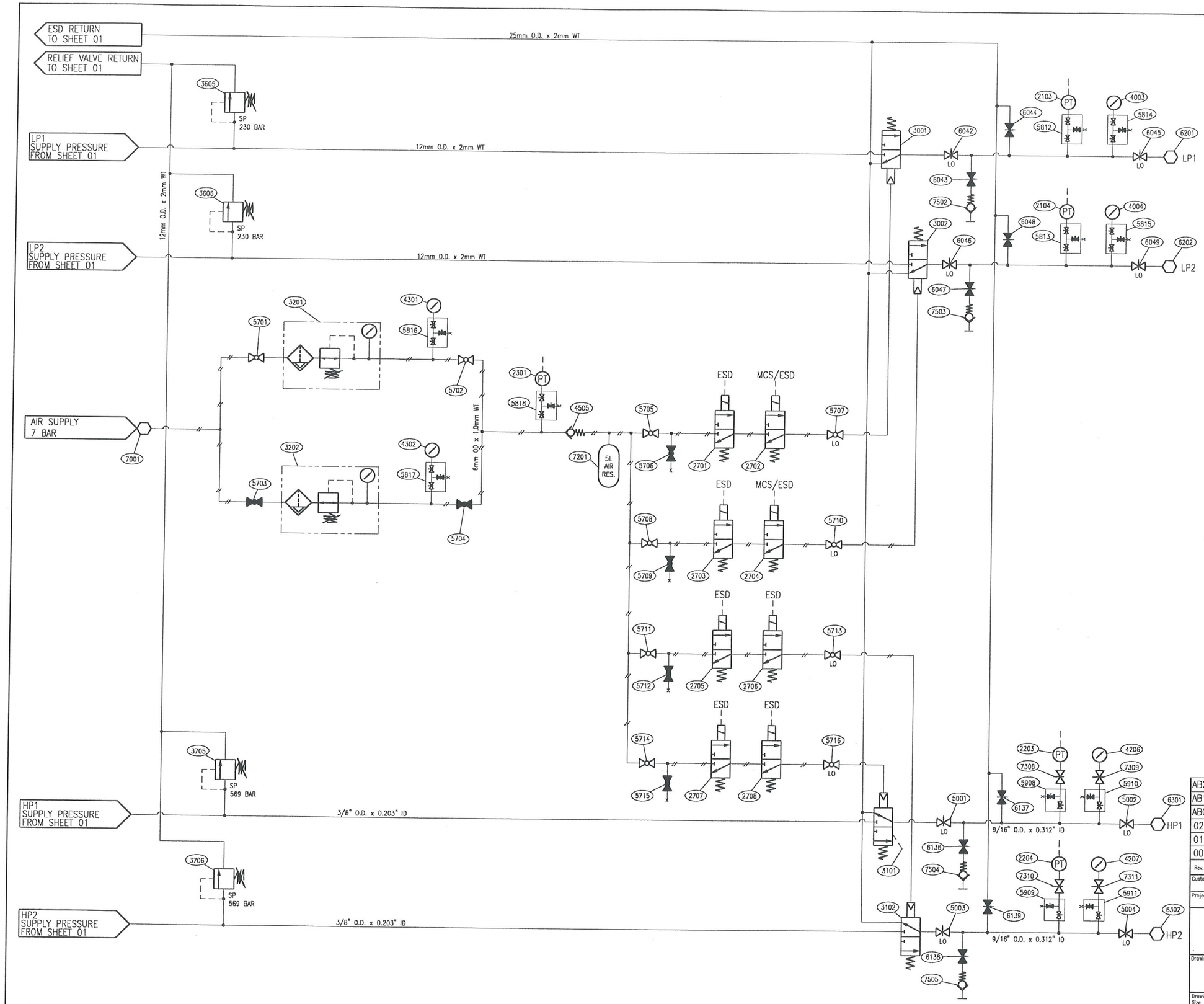

RECEIVER: client
AS BUILT
19 NOV. 2001
SIGN.
KONGSBERG OFFSHORE a.s.

NOTES:

REFERENCES:

DESIGN SPEC.	: SPC-0000020465
LIST OF MATERIAL	: 7512-A03-001/LIST-0000020236
GENERAL ARRANGEMENT	: 7512-E01-002/XD-0001000572
WIRING DIAGRAM, EL. EQUIPMENT	: 7512-F03-001/XK-0001000117
INTERFACE & ENVELOPE	: 7512-E01-001/XD-0001000574
P&ID	: 7512-I01-001/XB-0001000090
LIST OF MATERIAL EL.	: 7512-A03-002/LIST-0000020237

ABBREVIATIONS:
LO = VALVE LOCKED OPEN
LC = VALVE LOCKED CLOSED
BP = BURST DISC PRESSURE
SP = SET PRESSURE
CP = CRACK PRESSURE

Rev.	Date	Issue Description	Prep.	Chkd	Appr.
AB2	12.10.01	AS-BUILT	KH	JRJ	OB
AB1	18.09.01	AS-BUILT	SMK	JRJ	OB
AB0	22.08.01	AS-BUILT	K.H	JRJ	OB
02	10.08.01	REISSUED FOR CONSTRUCTION	SMS	JRJ	OB
01	03.05.01	ISSUED FOR CONSTRUCTION	SMS	RH	PO
00	02.03.01	ISSUED FOR APPROVAL	SMK	PO	RH

Customer: FMC KONGSBERG SUBSEA
Project: OTTER HPU
First Angle Projection — All dim. in mm
Scale: –

SEMCO technology
Semco Technology a.s
Fabrikkveien 25. 4065 Stavanger
Tel. 51811200 Fax. 51811201

Drawing Title: HYDRAULIC SCHEMATIC DIAGRAM HPU

Drawing Size: A1 | Dwg No. 7512-D02-001 | Sheet 02 of 02 | Rev. AB2

REV.	DATE	DESCRIPTION	DRN	DRG CHK	ENG CHK	ENG APP	PROJ APP	TFEEUK APP
02	23.10.01	AS BUILT	SEM	TOHA	TOHA	JTT	JTT	

TOTAL FINA ELF — OTTER FIELD DEVELOPMENT

DRG NO: OTT-U10-PT-80-1072 | Contractor | SHT. 02 | REV. 02

ELECTRONIC ORGINAL. User is responsible for verification of correct revision status on document copy.

REL./CHANGE NO.	PREPARED	LAST SAVED (DATE/TIME)	REV.
500000008139	Berit Kopseng	23.10.2001 16:11	B

FMC EnergySystems — FMC Kongsberg Subsea
DRAWING NO. XV-0001000122
TITLE: HPU Hydraulic schematic - Otter
SHEET 2 OF 2